STANDARD INJECTION MOLDING COMPANY, INC ®

REVISIONS			
REV.	DESCRIPTION	DATE	APPROVED
A	PRODUCT RELEASE	01/15/02	

NOTES: 1.5° DRAFT ON ALL SIDES
.125 RADIUS ON ALL SIDES
TYP. WALL THICKNESS .095

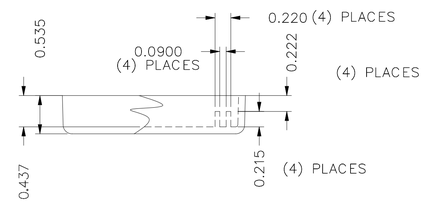

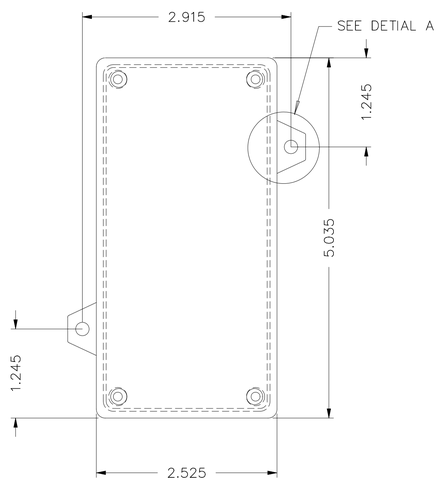

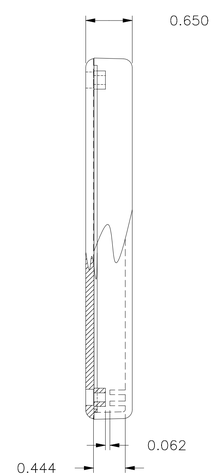

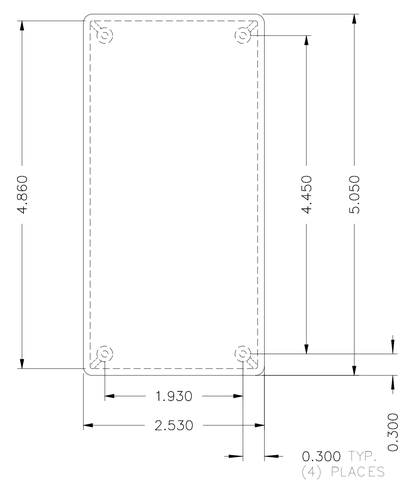

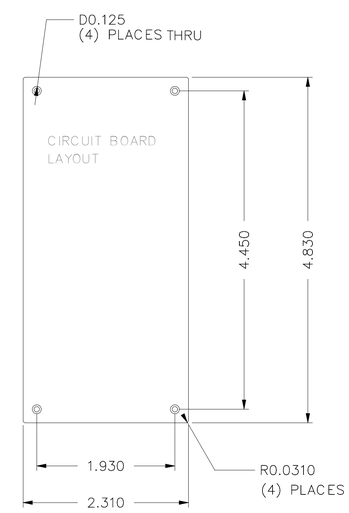

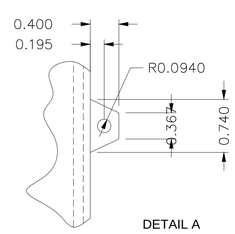

DETAIL A

UNLESS OTHERWISE SPECIFIED DIMENSIONS ARE IN INCHES.
TOLERANCES ARE ± .015 UNLESS OTHERWISE STATED
ANGLES ± .5°
MATERIAL: ABS
FINISH: Texture
CAD GENERATED DRAWING DO NOT UPDATE MANUALLY

INCLUDED HARDWARE			
Qty.	SCREWS	Qty.	FEET
4	#4 x 7/16	--	--

UTILITY SERIES

SIMCO

050X25/M

SIZE	DRAWING NO.	REV.
D	ME050X25MS	A

SCALE: | CAD FILE: 050X25 M.DC | SHEET 1 OF 1